PRODUCT SPECIFICATIONS

Mar 2018

Waterbridge Exposed Shower
WB-SHW-880

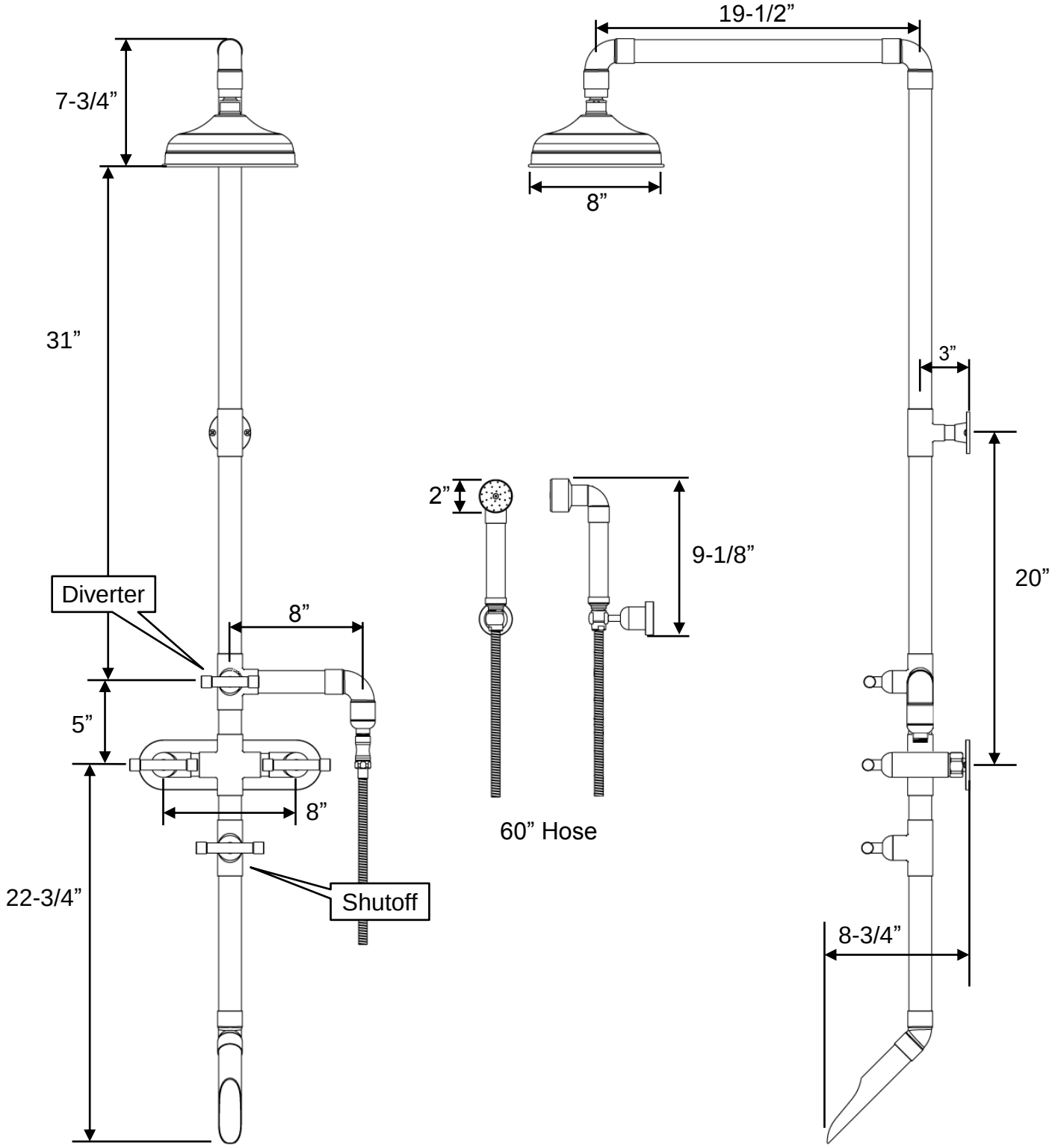

• Dimensions apply to systems produced after Jan. 1st, 2018 • Custom dimensions and finishes available	Connection	1/2" copper
	GPM	2.0

800.330.5553 | f 707.789.9201 | info@sonomaforge.com